NovoSpeed Thermo

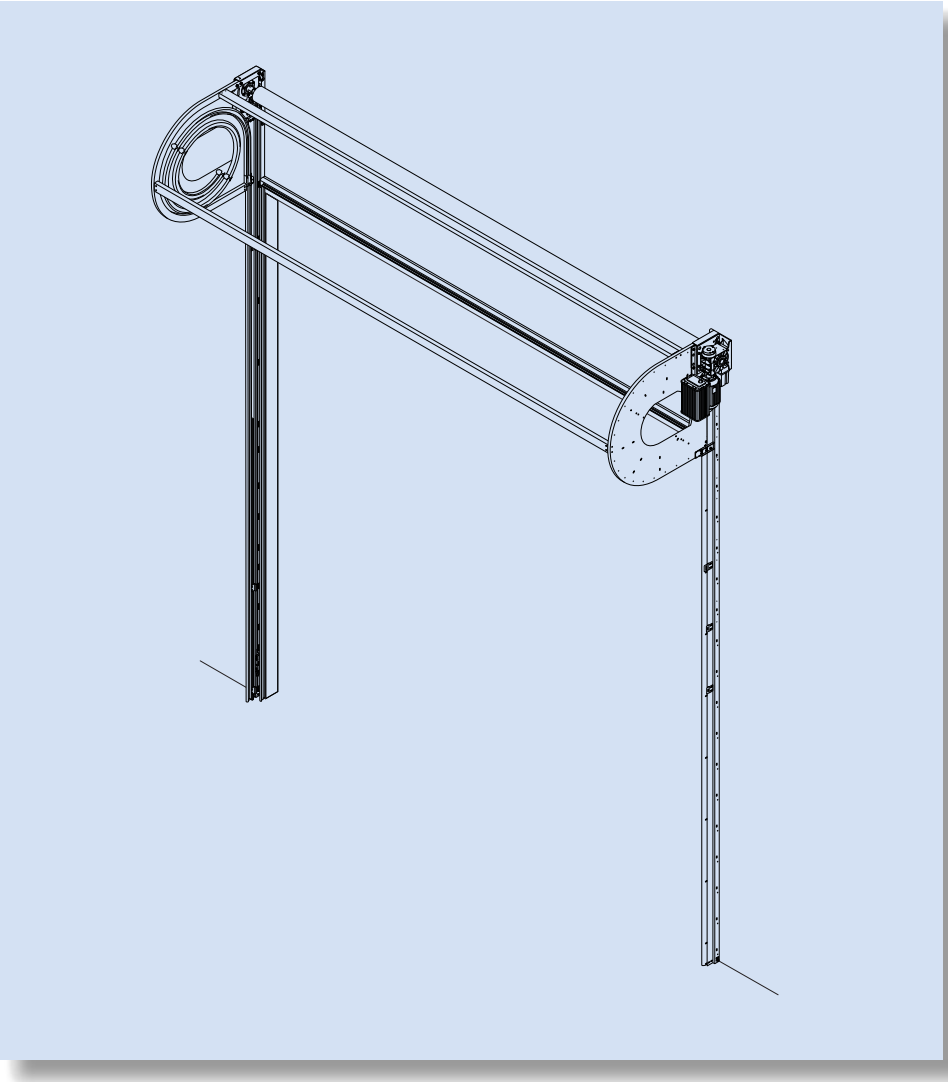

TÜV NORD Zertifizierung
Baumuster geprüft

ALP02000 200715

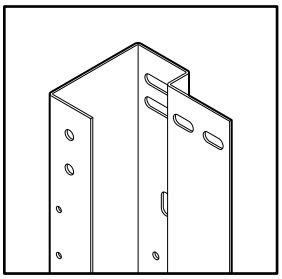

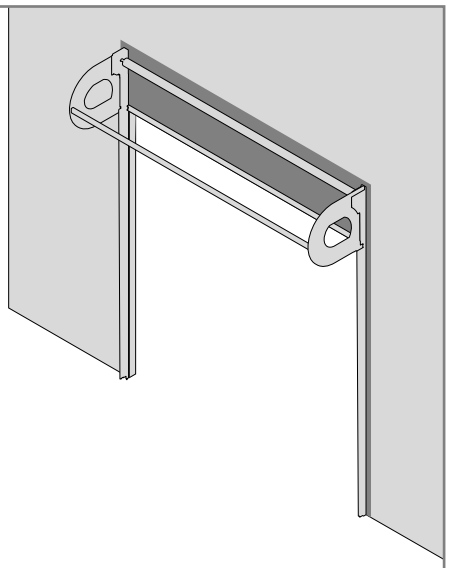

L+R

120 mm

1100 mm

350 mm

800 mm

1200 mm

1100 mm

A - A

H

A - A

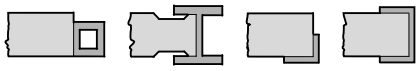

ALP02002 170406

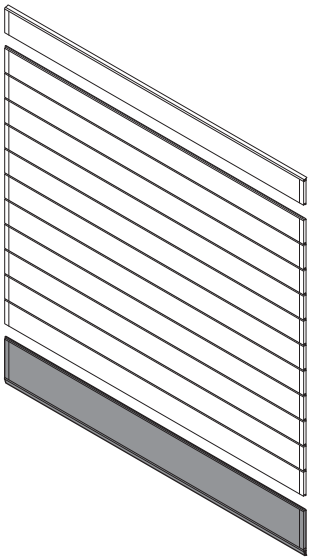

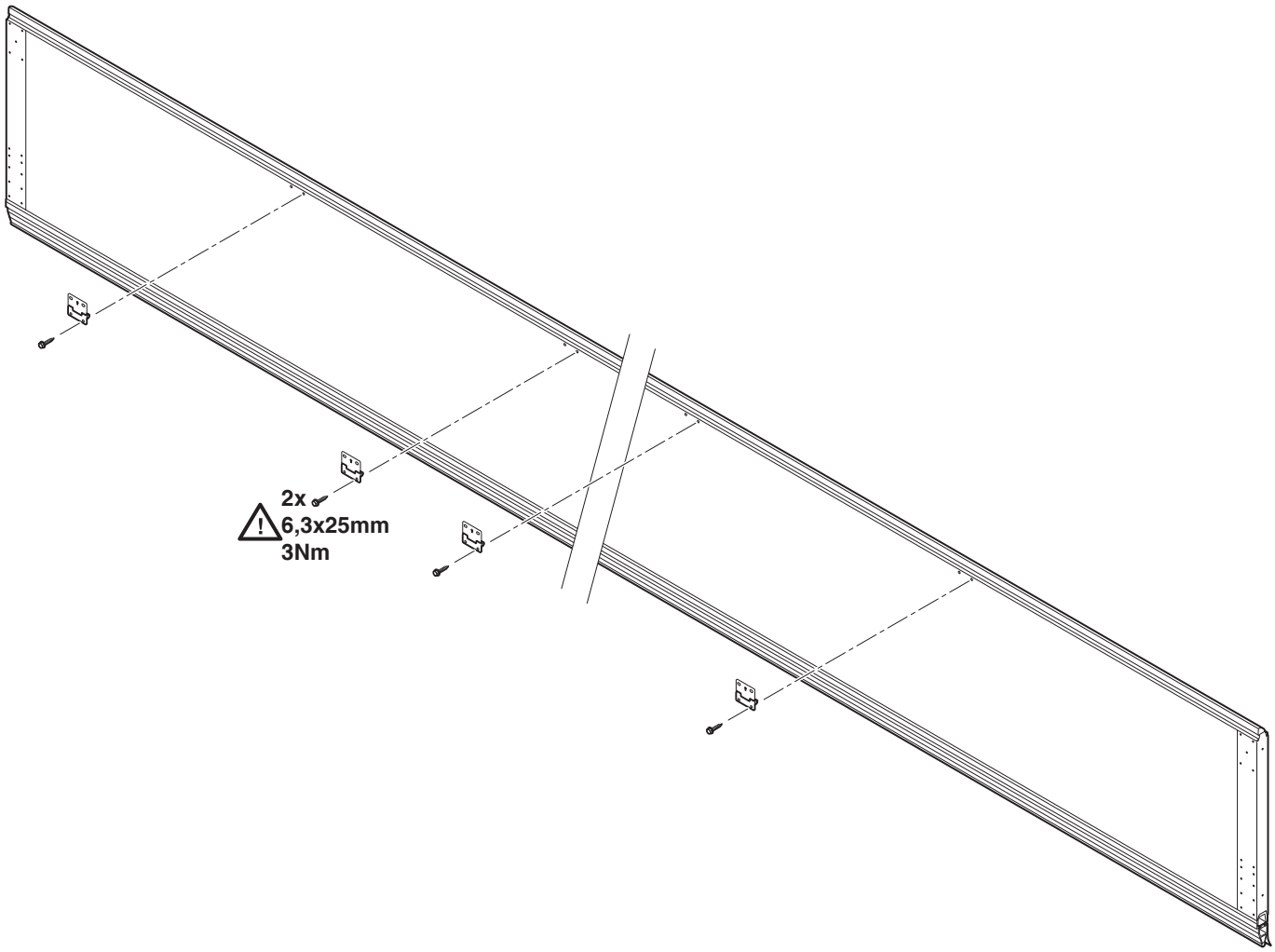

ALP02200 210106

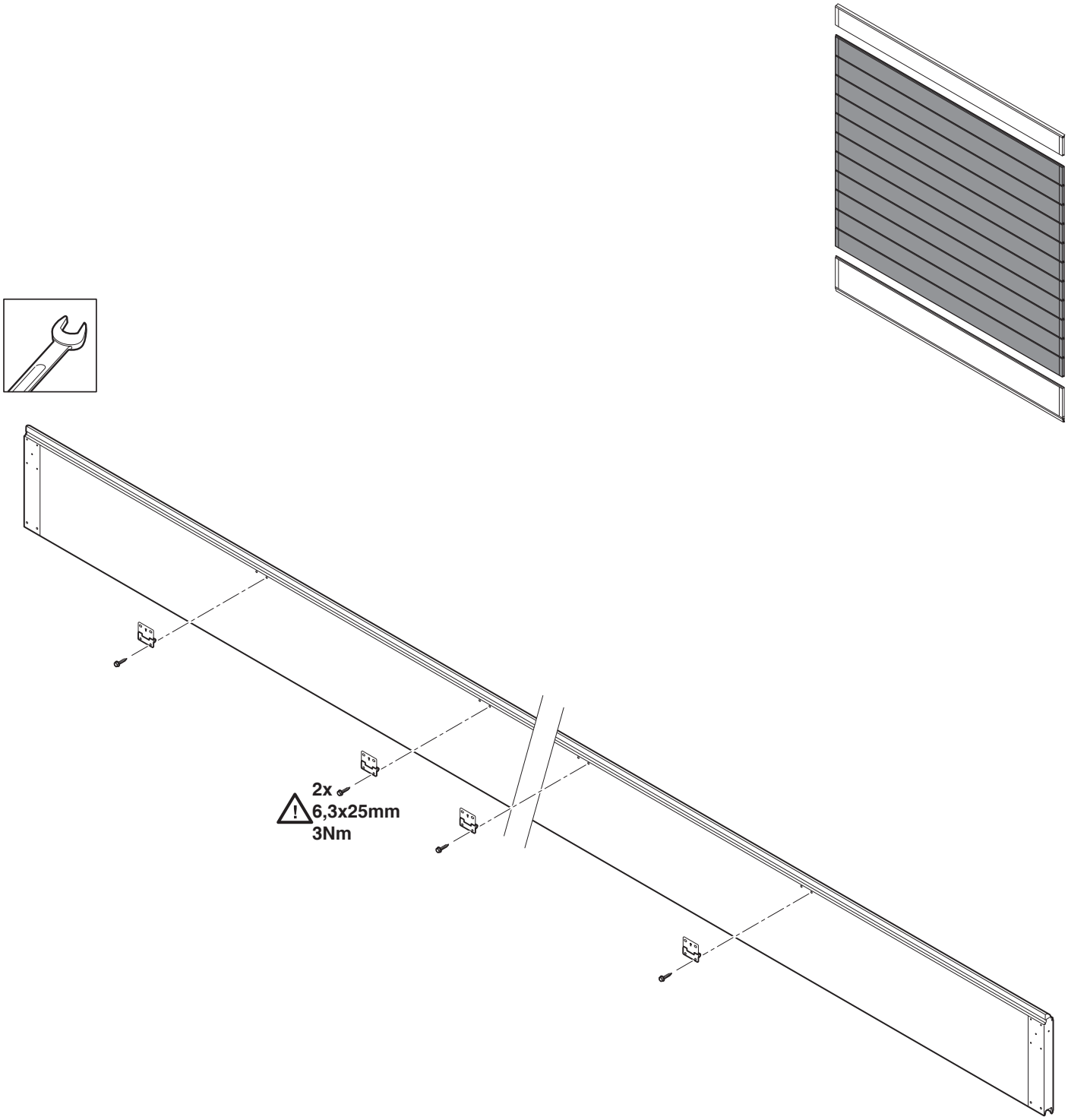

ALP02201 210106

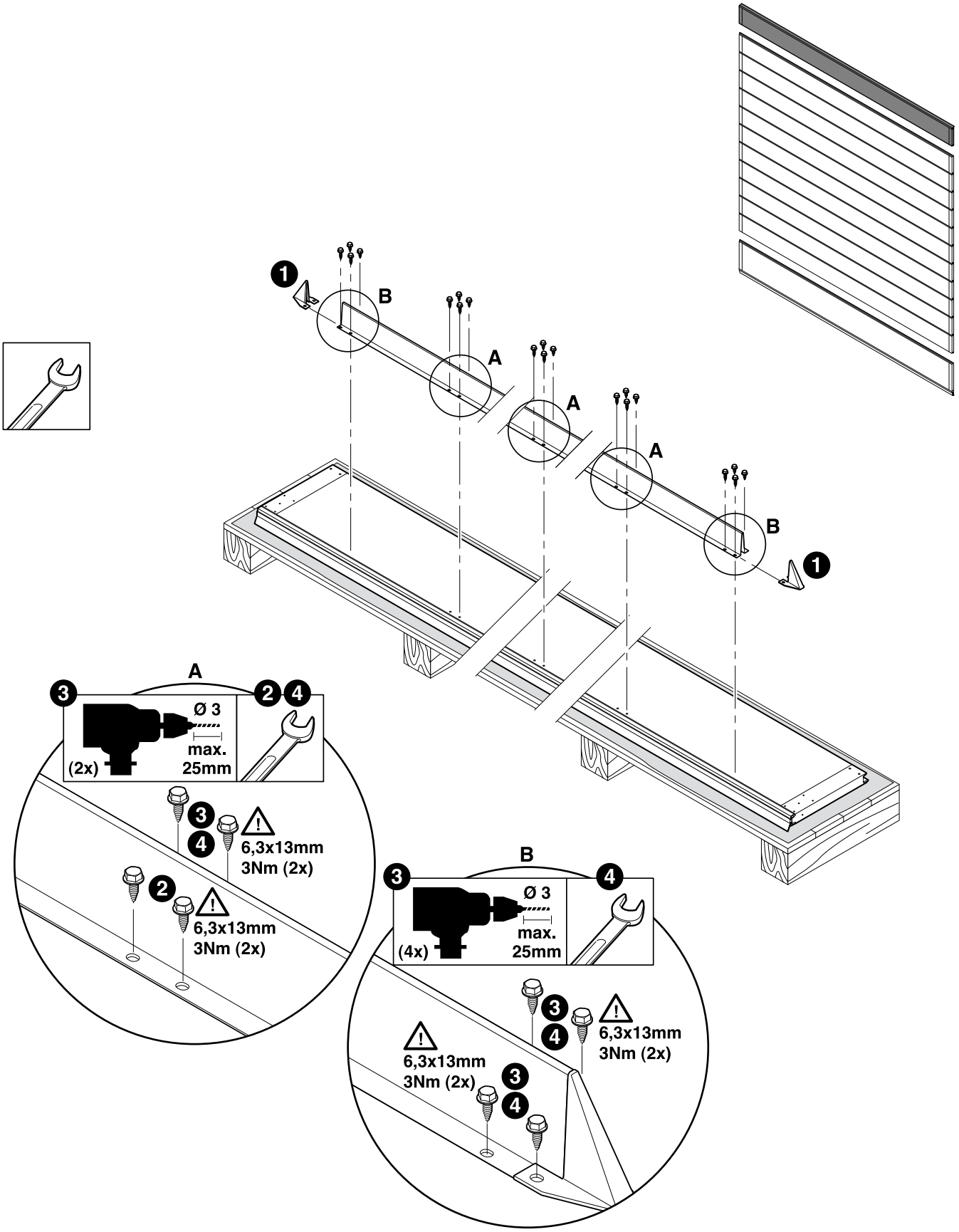

ALP02213 160906

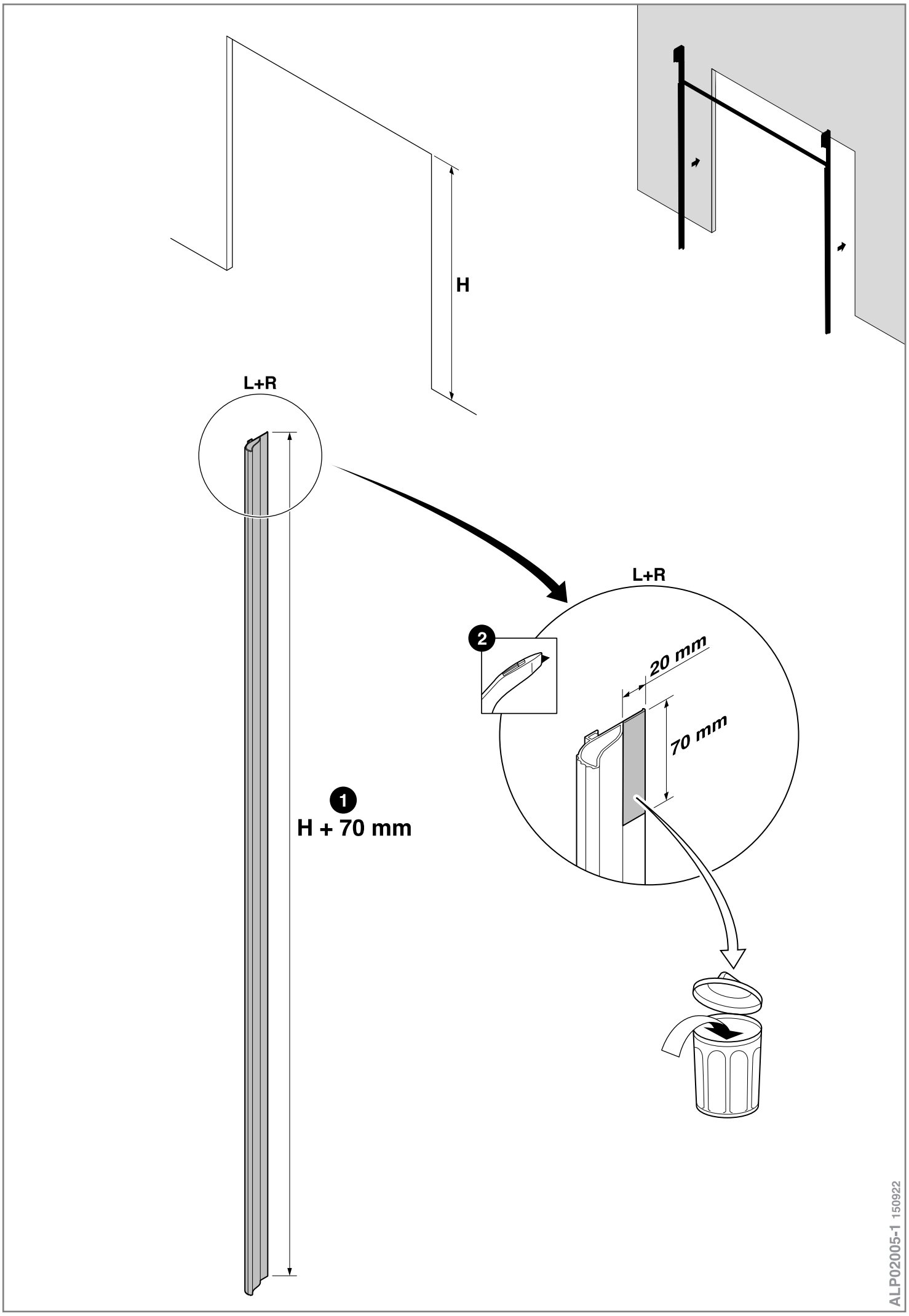
H
L+R
1
H + 70 mm
L+R
2
20 mm
70 mm
ALP02005-1 150922

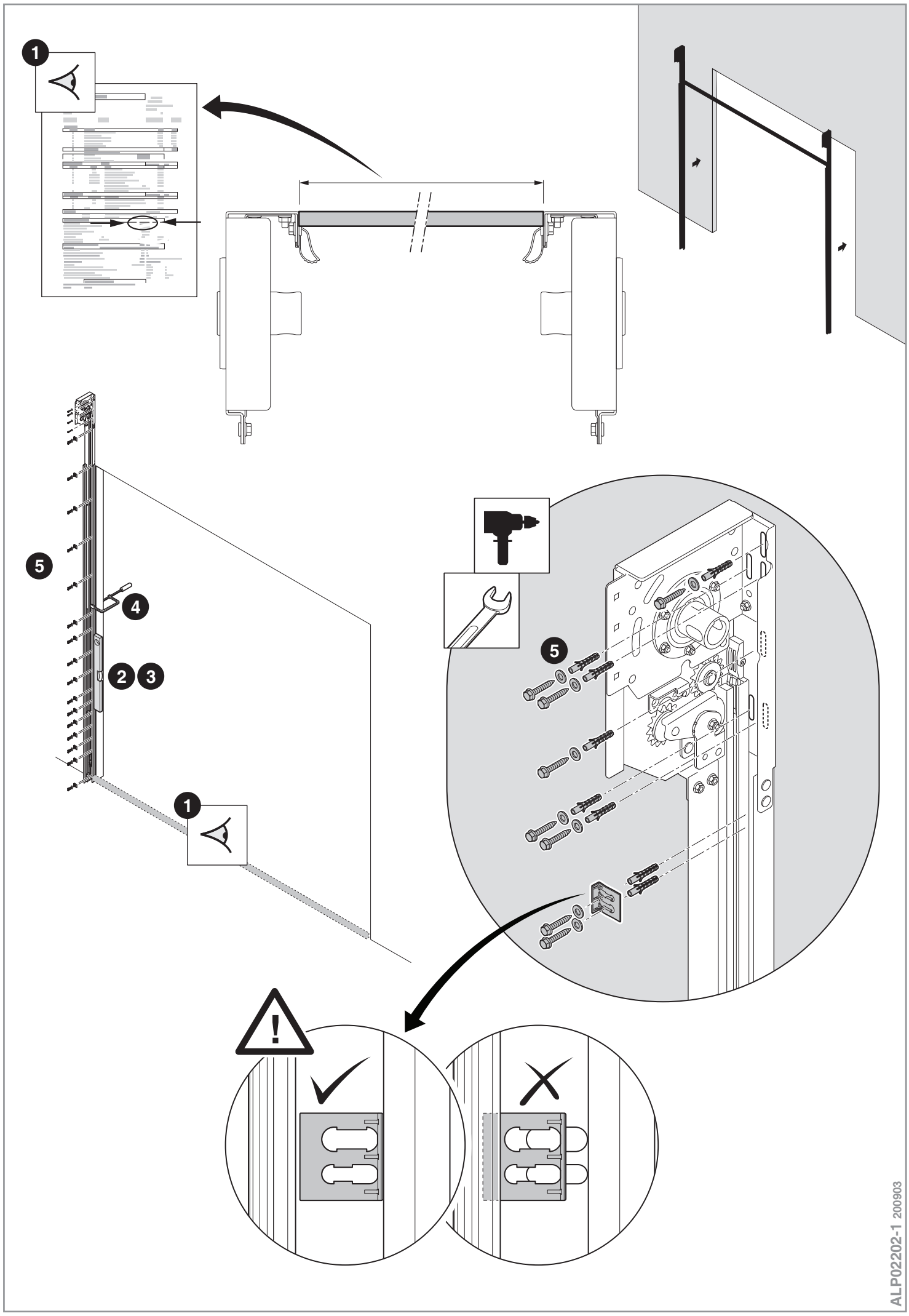
1
5
4
2
3
1
5
ALP02202-1 200903

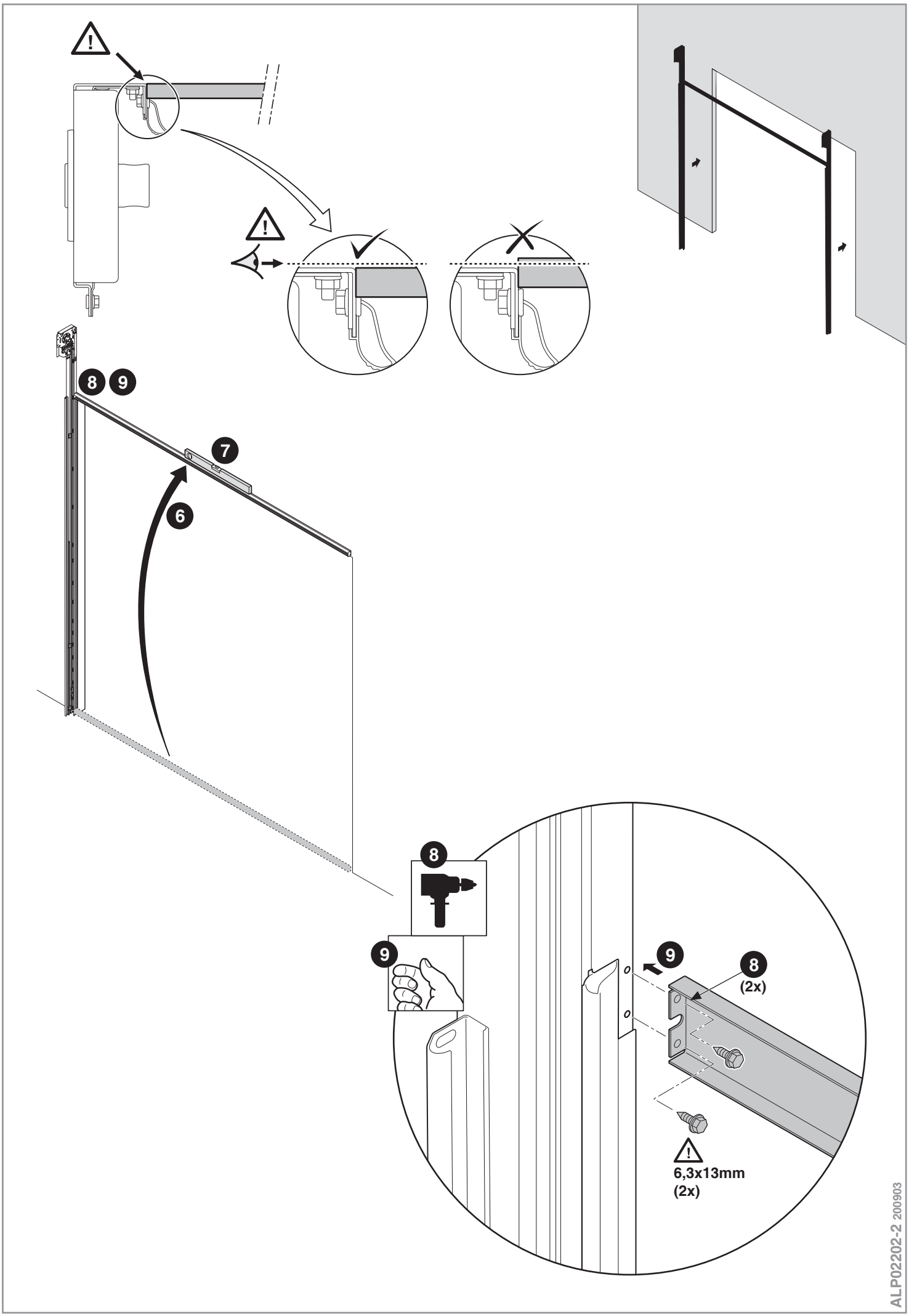
8
9
7
6
8
9
9
8
(2x)
6,3x13mm
(2x)
ALP02202-2 200903

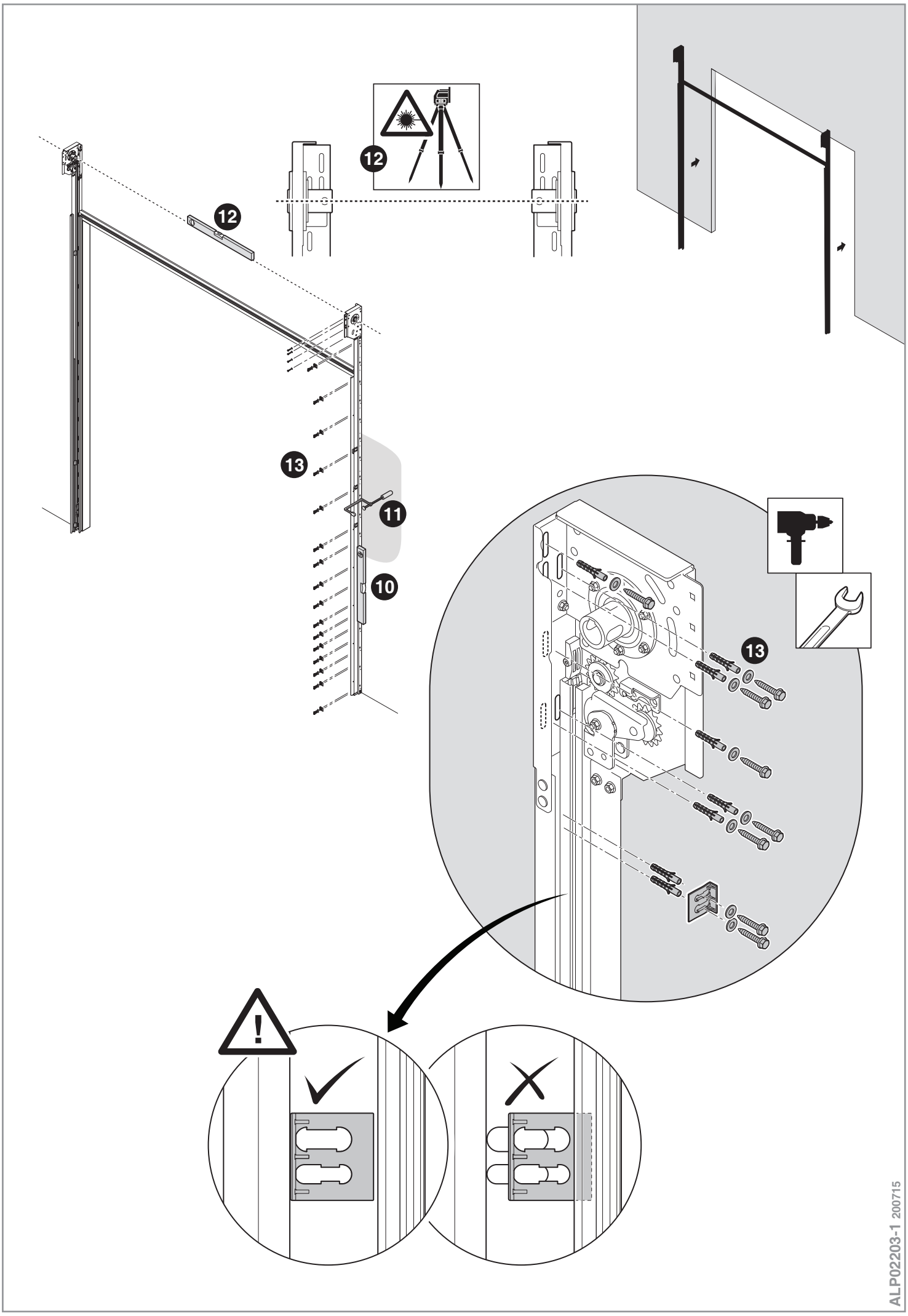
12
12
13
11
10
13
ALP02203-1 200715

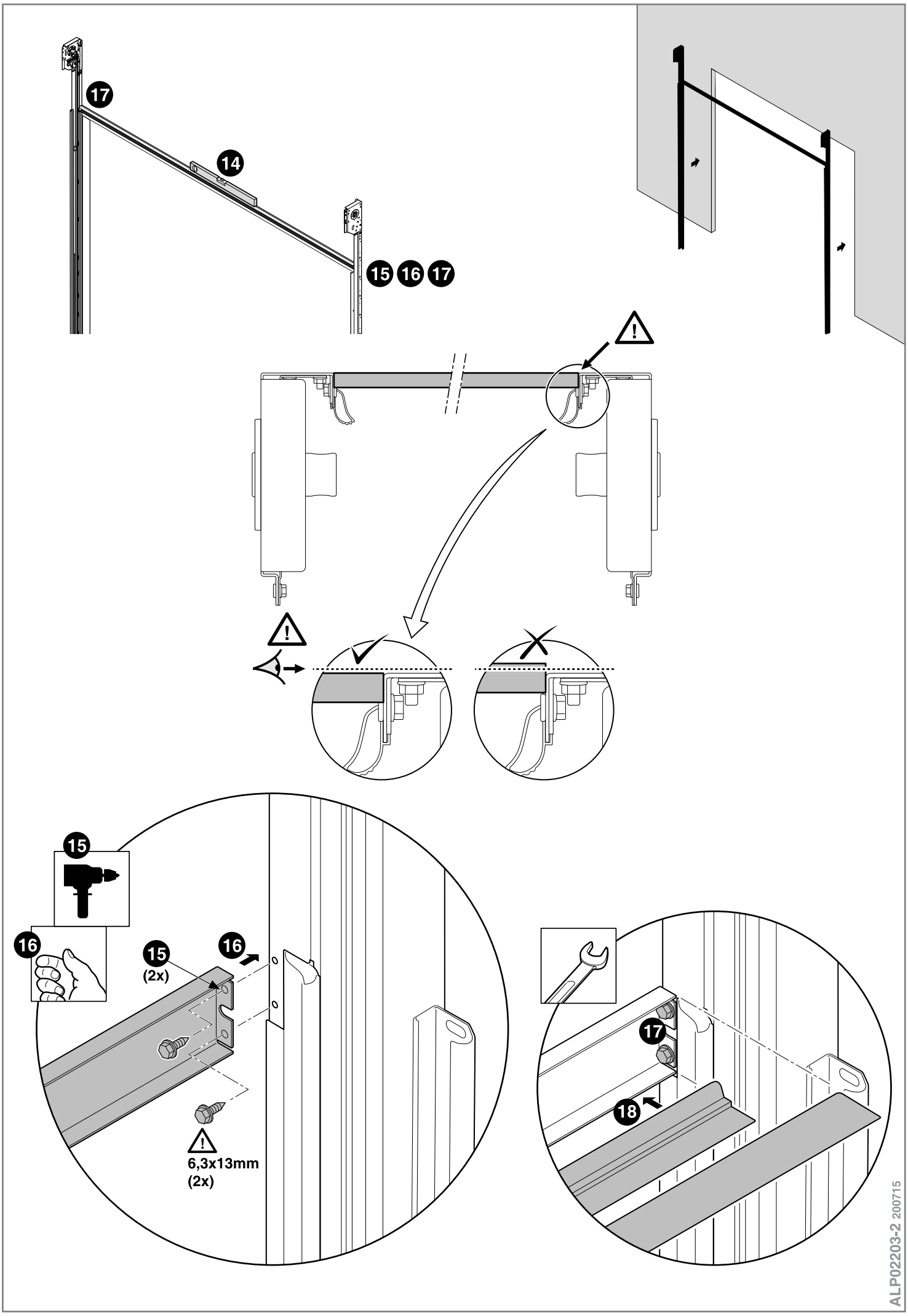
17
14
15 16 17
15
16
15
(2x)
16
6,3x13mm
(2x)
17
18
ALP02203-2 200715

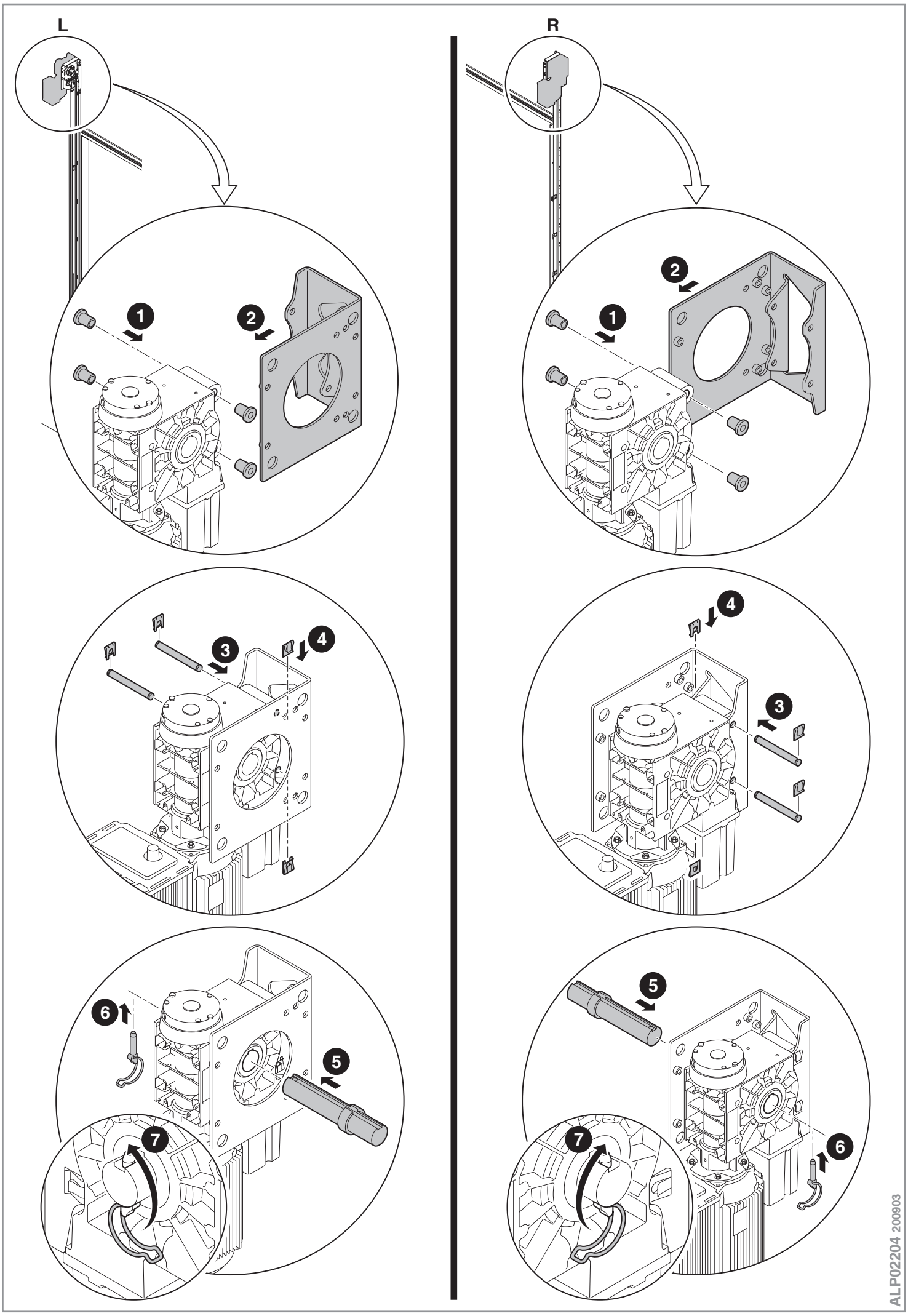
L
R
1
2
3
4
5
6
7
ALP02204 200903

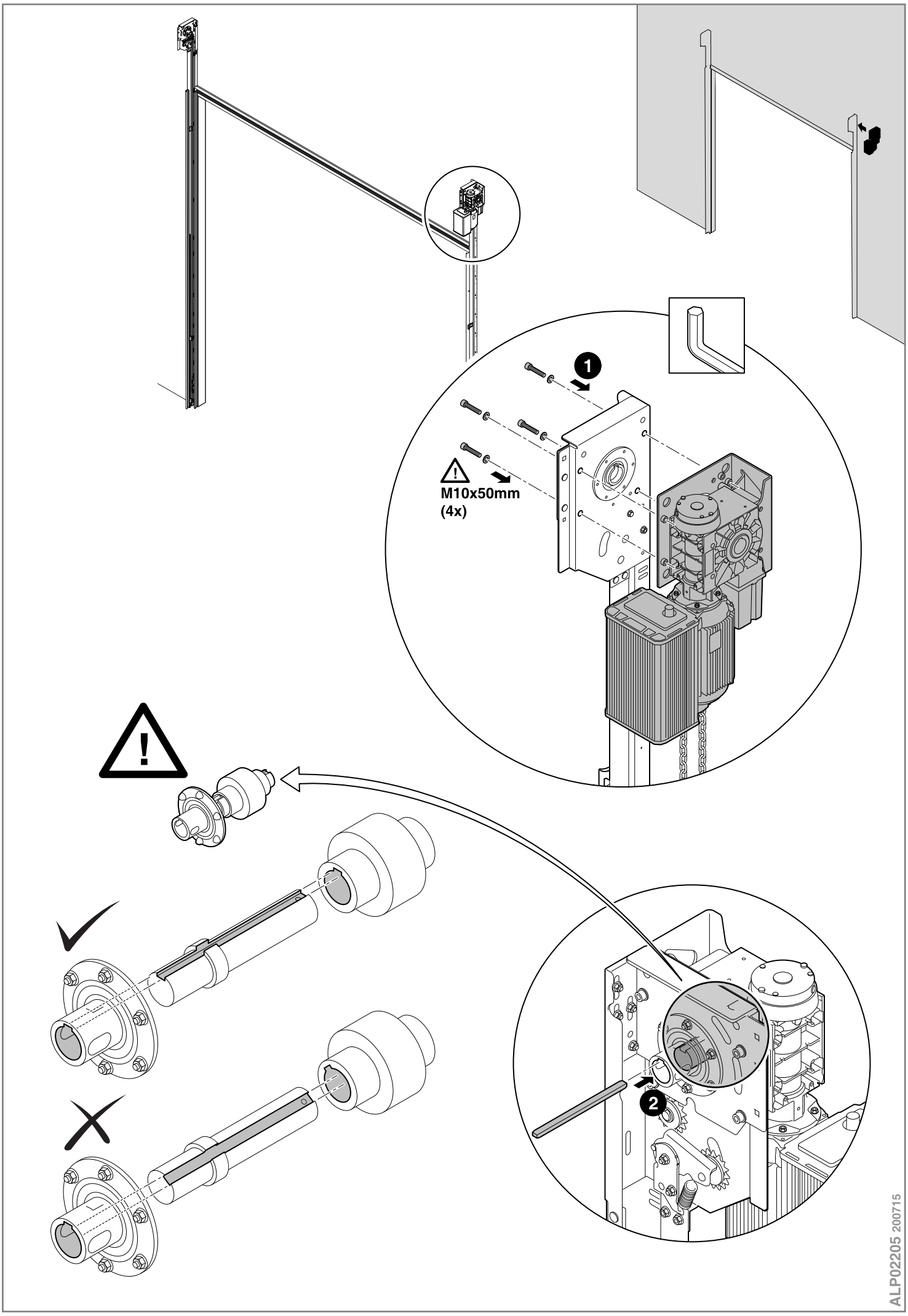
1
M10x50mm
(4x)
2
ALP02205 200715

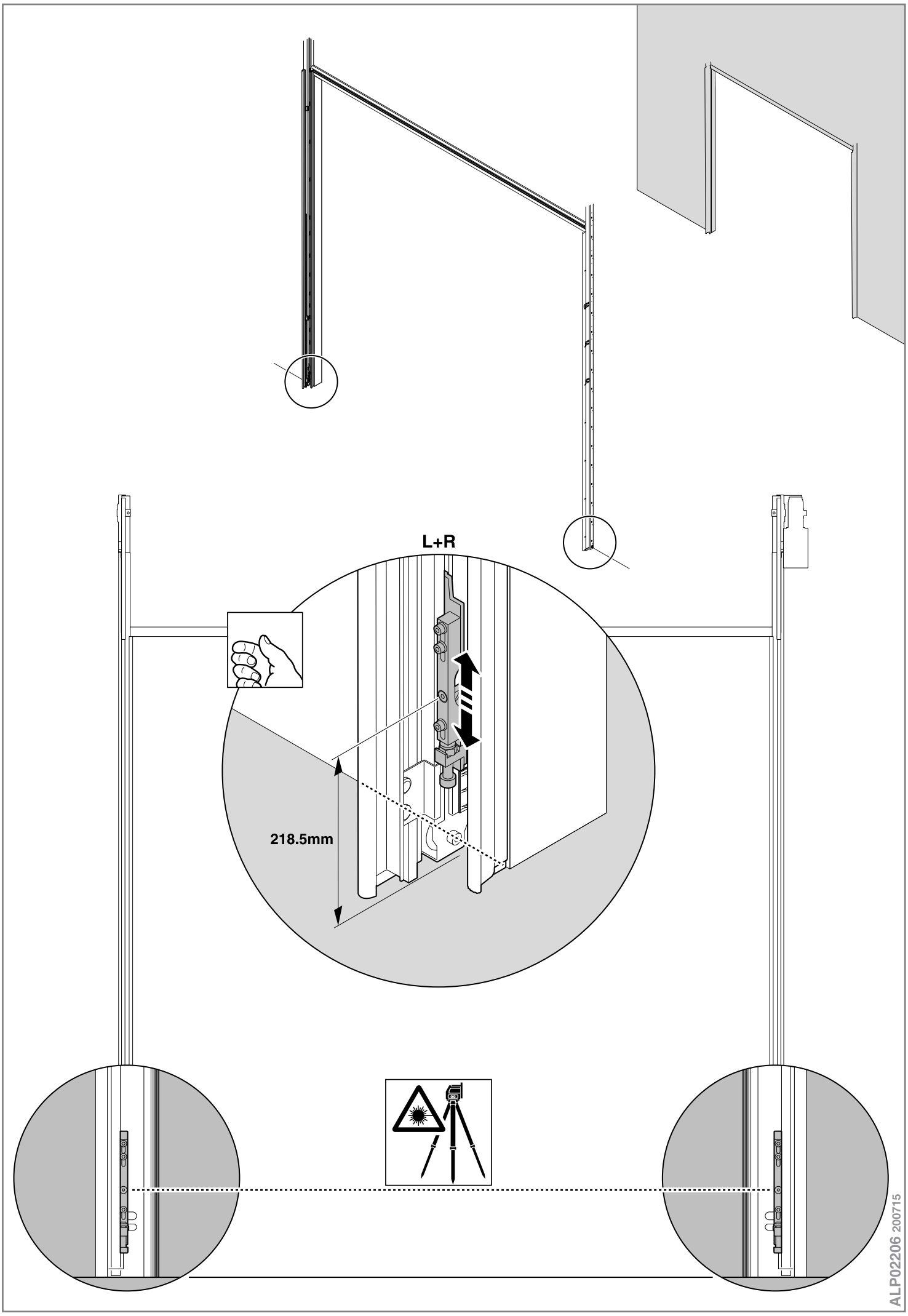
L+R
218.5mm
ALP02206 200715

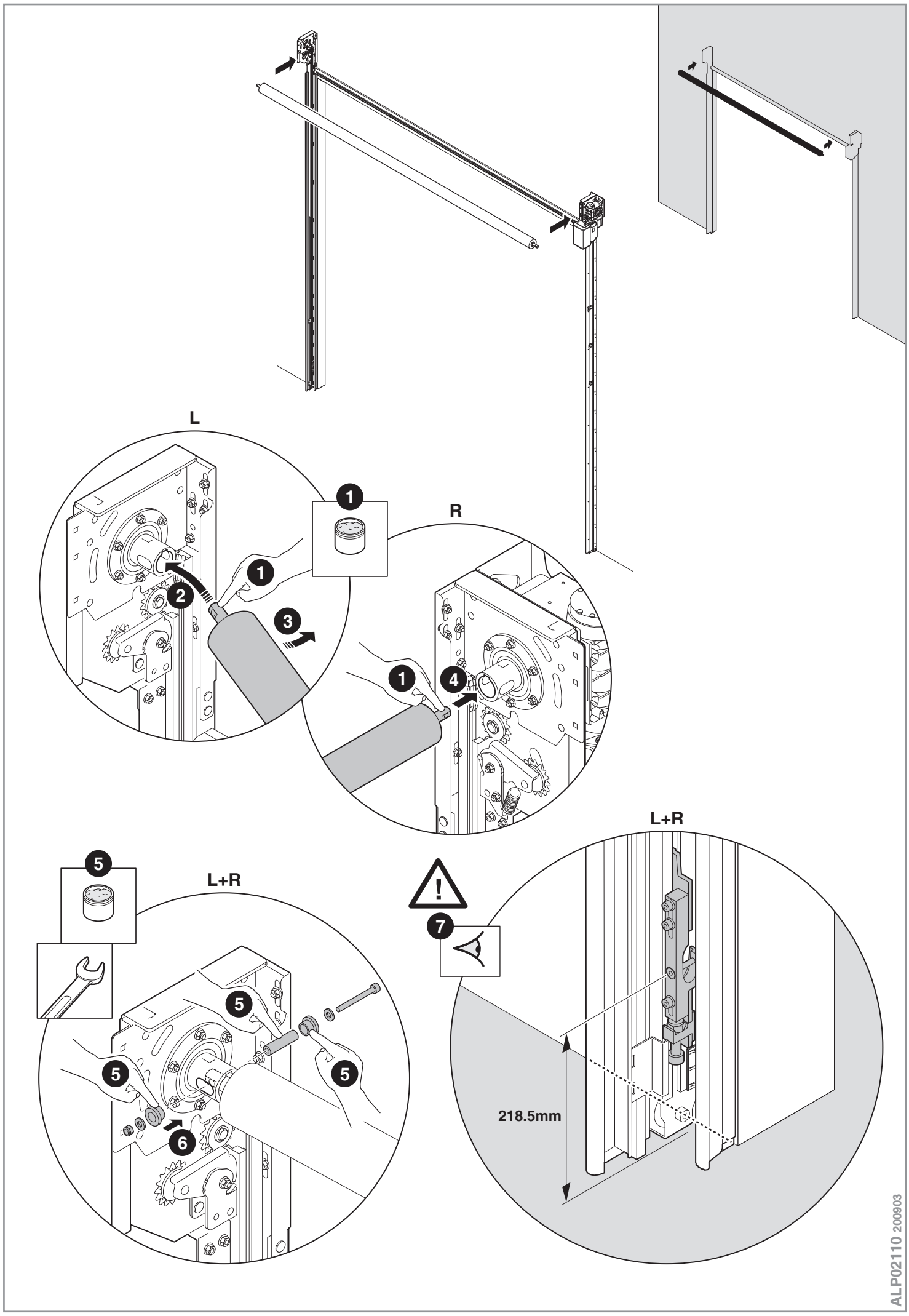
L
R
L+R
L+R
218.5mm
ALP02110 200903

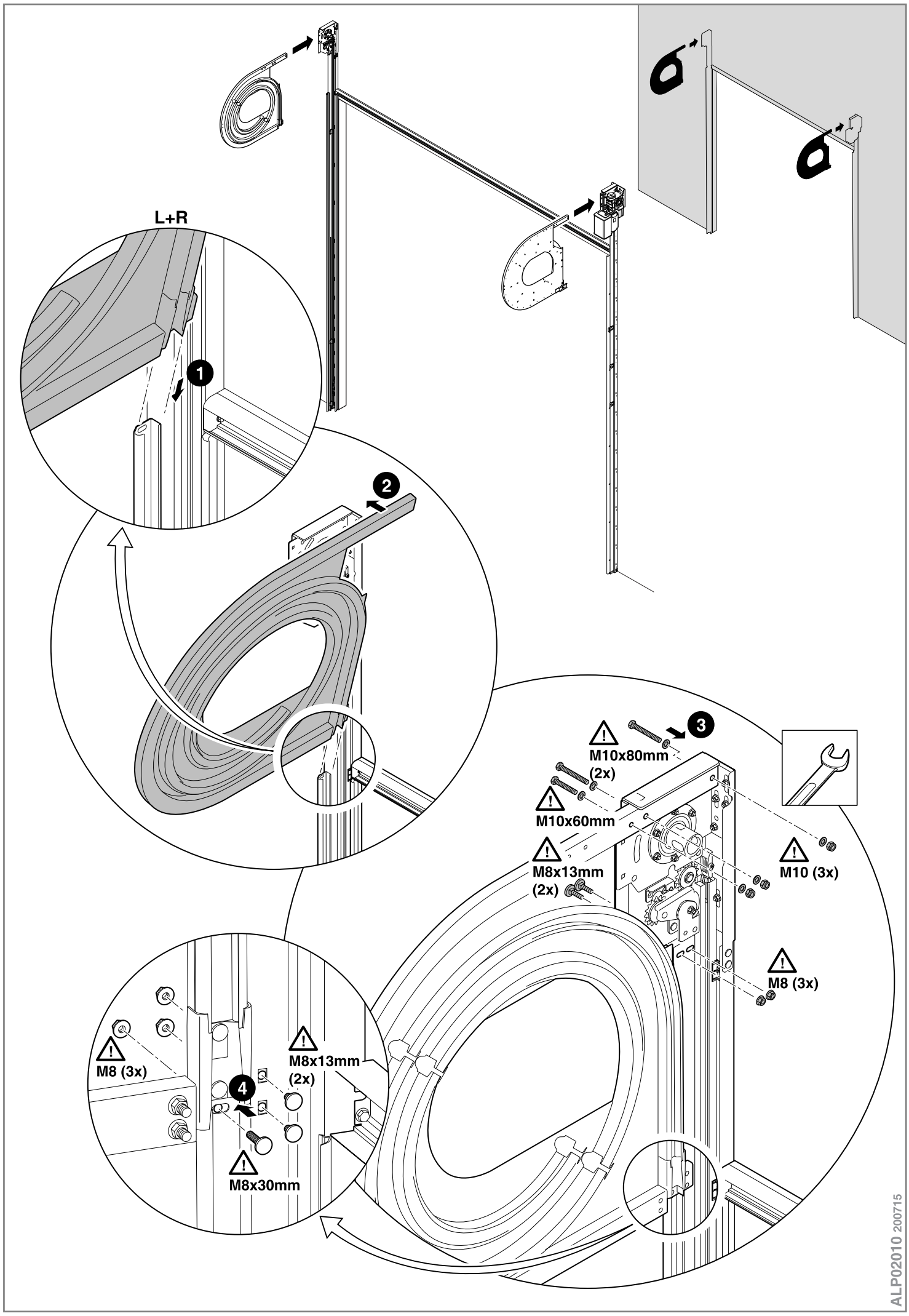
L+R
1
2
3
M10x80mm
(2x)
M10x60mm
M8x13mm
(2x)
M10 (3x)
M8 (3x)
M8 (3x)
M8x13mm
(2x)
4
M8x30mm
ALP02010 200715

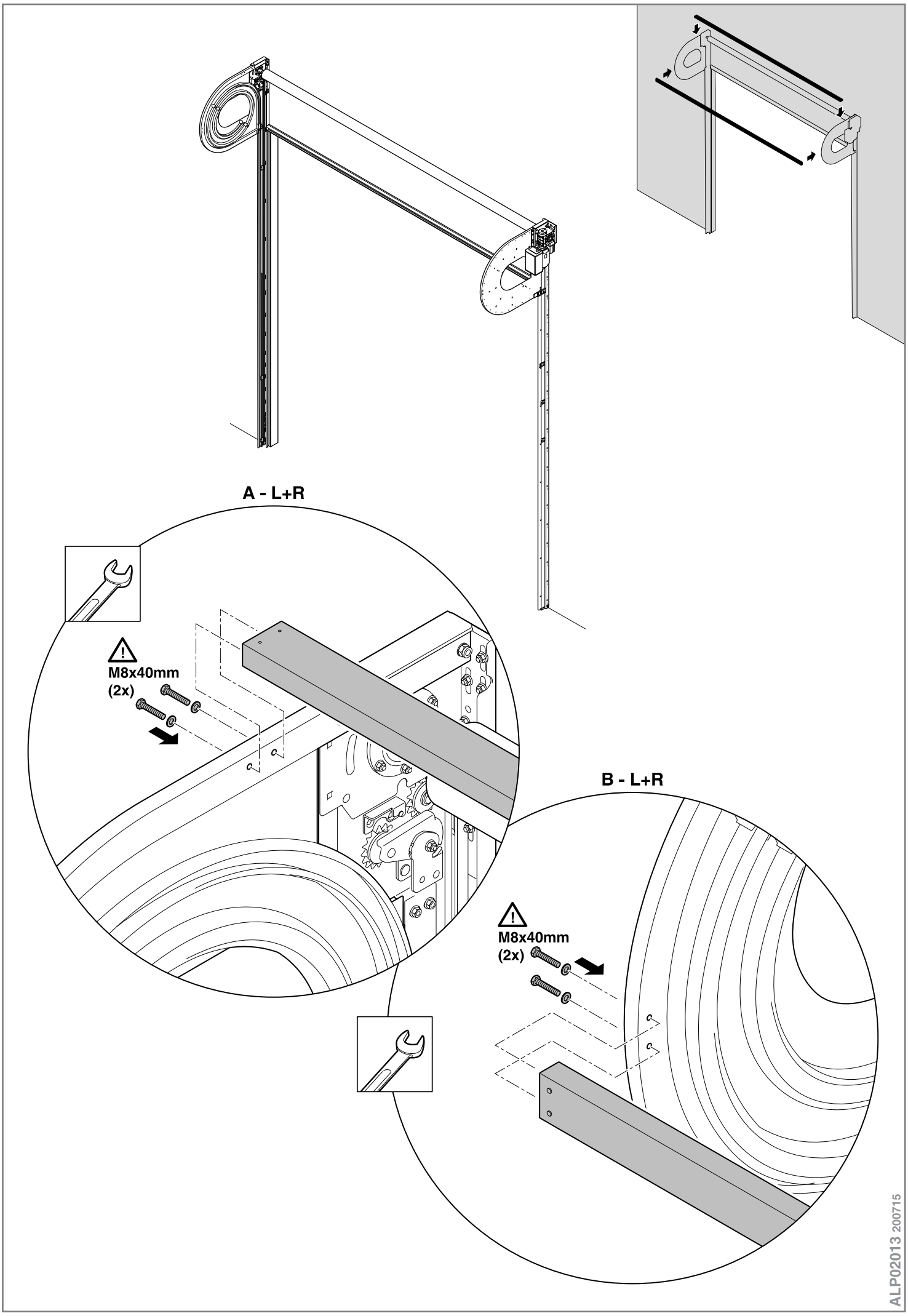
A - L+R
M8x40mm
(2x)
B - L+R
M8x40mm
(2x)
ALP02013 200715

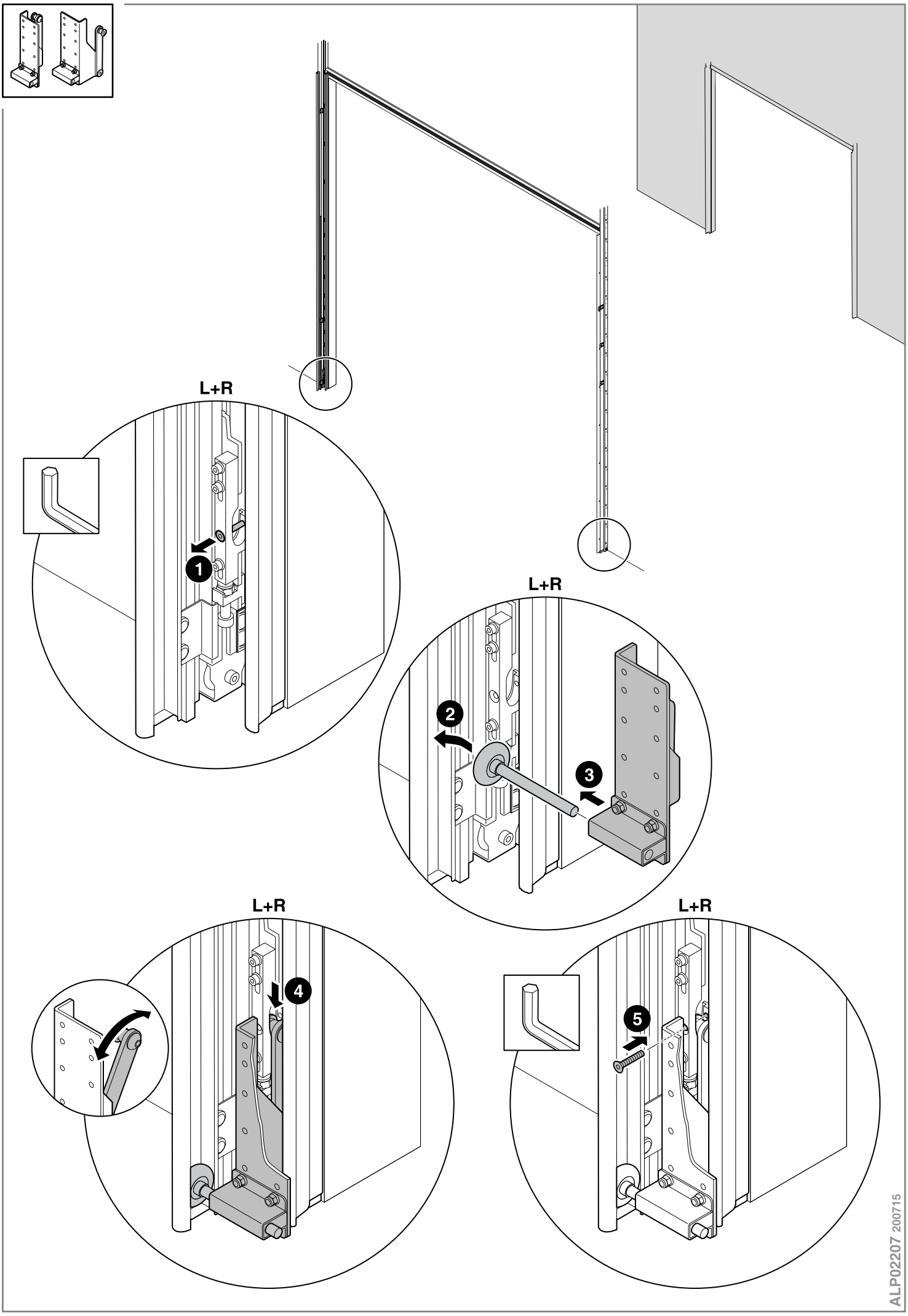
L+R
1
L+R
2
3
L+R
4
L+R
5
ALP02207 200715

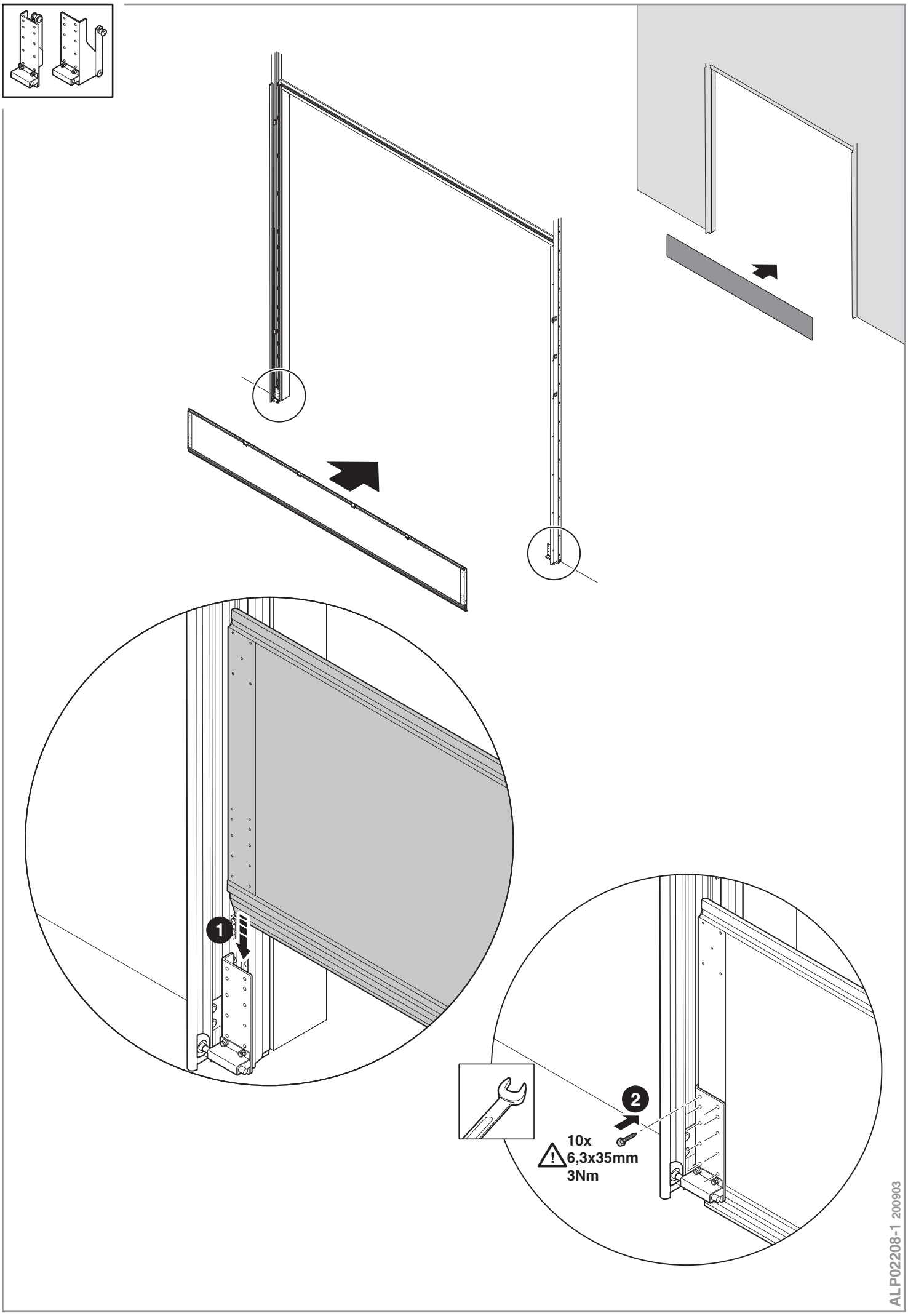
1
2
10x
6,3x35mm
3Nm
ALP02208-1 200903

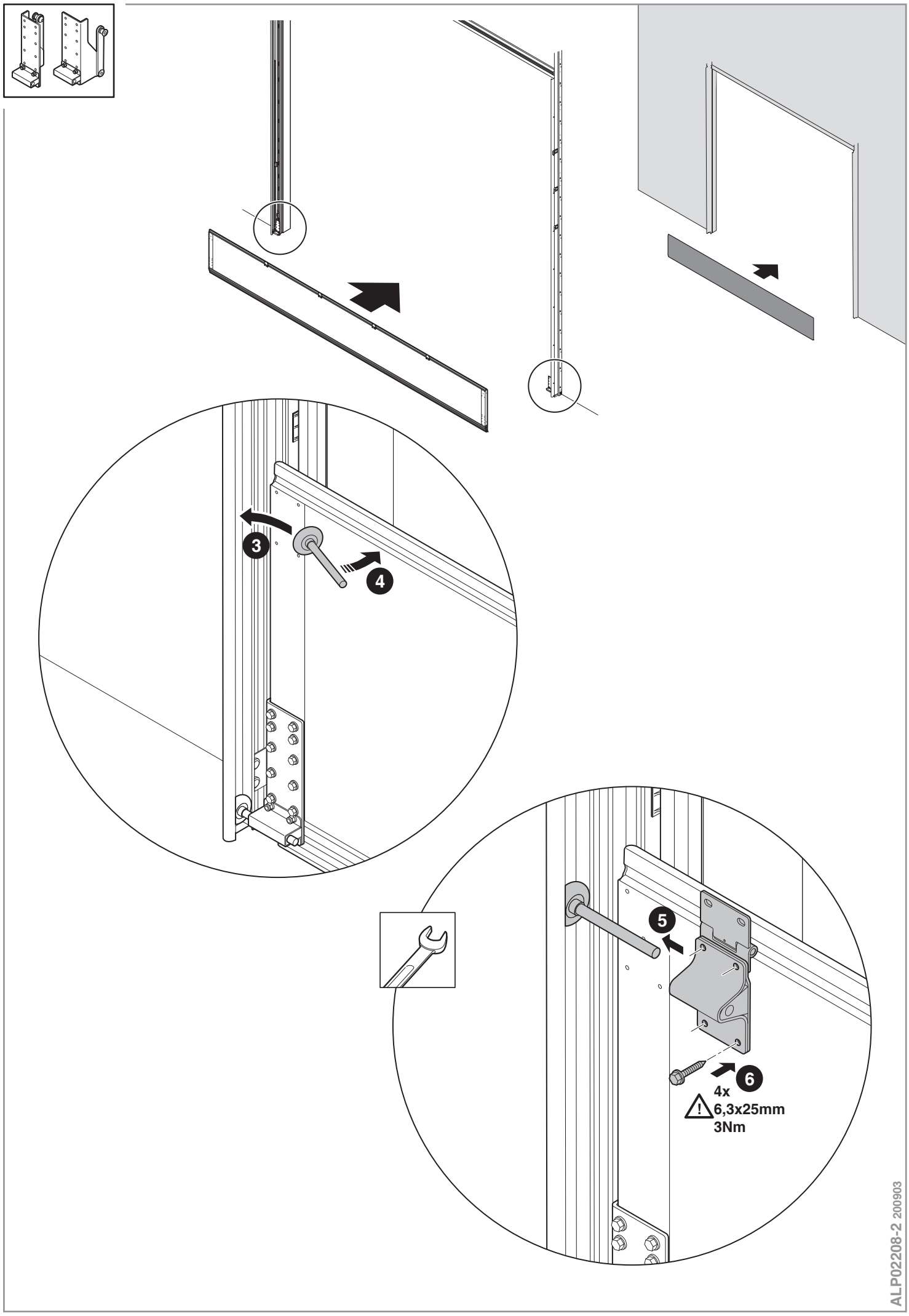

ALP02208-2 200903

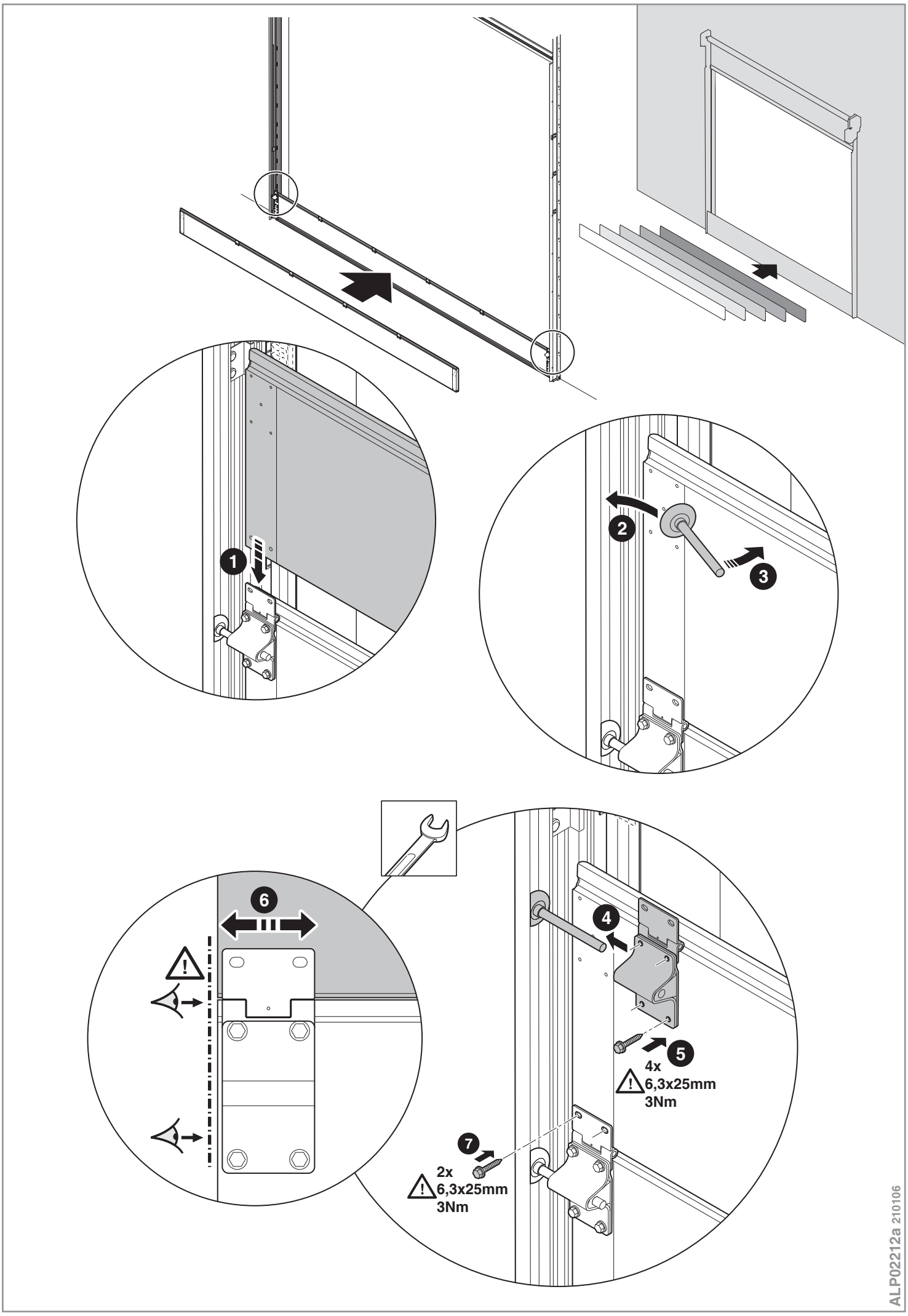
1
2
3
4
5
4x
6,3x25mm
3Nm
6
7
2x
6,3x25mm
3Nm
ALP02212a 2101 06

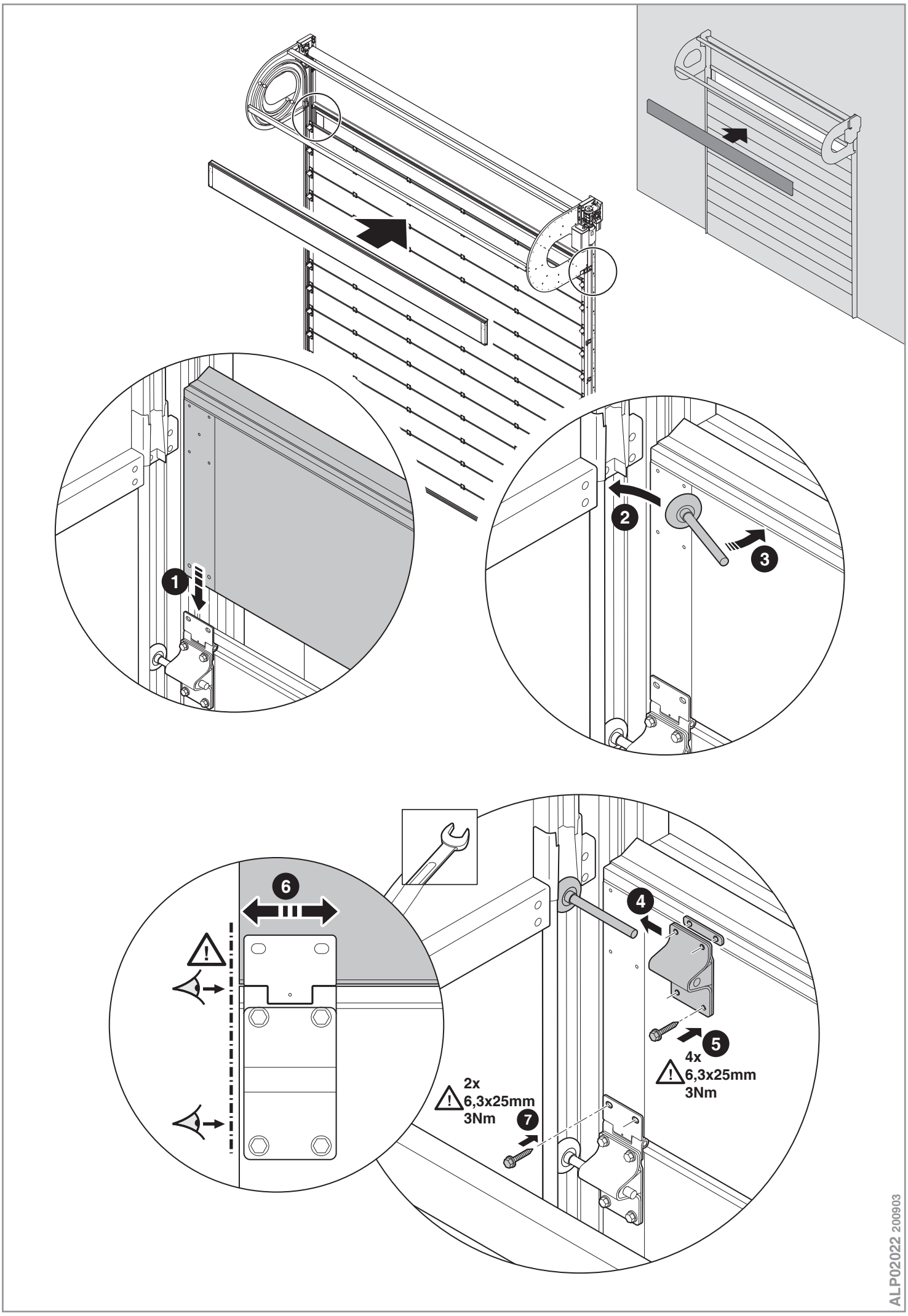
1
2
3
4
5
4x
6,3x25mm
3Nm
6
2x
6,3x25mm
3Nm
7
ALP02022 200903

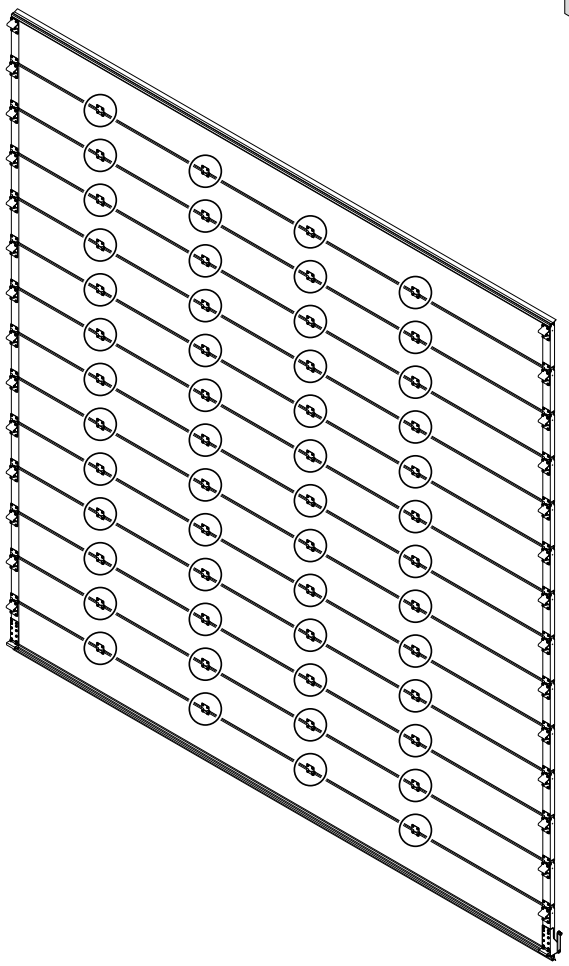

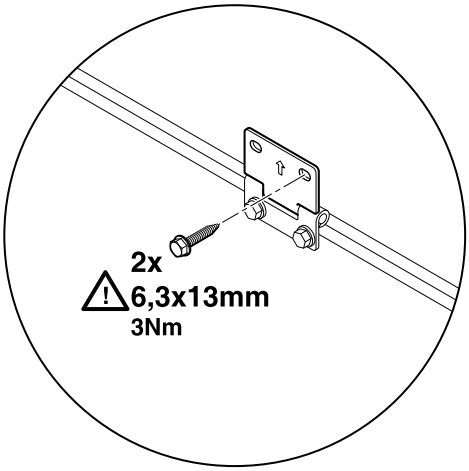

ALP02211 200715

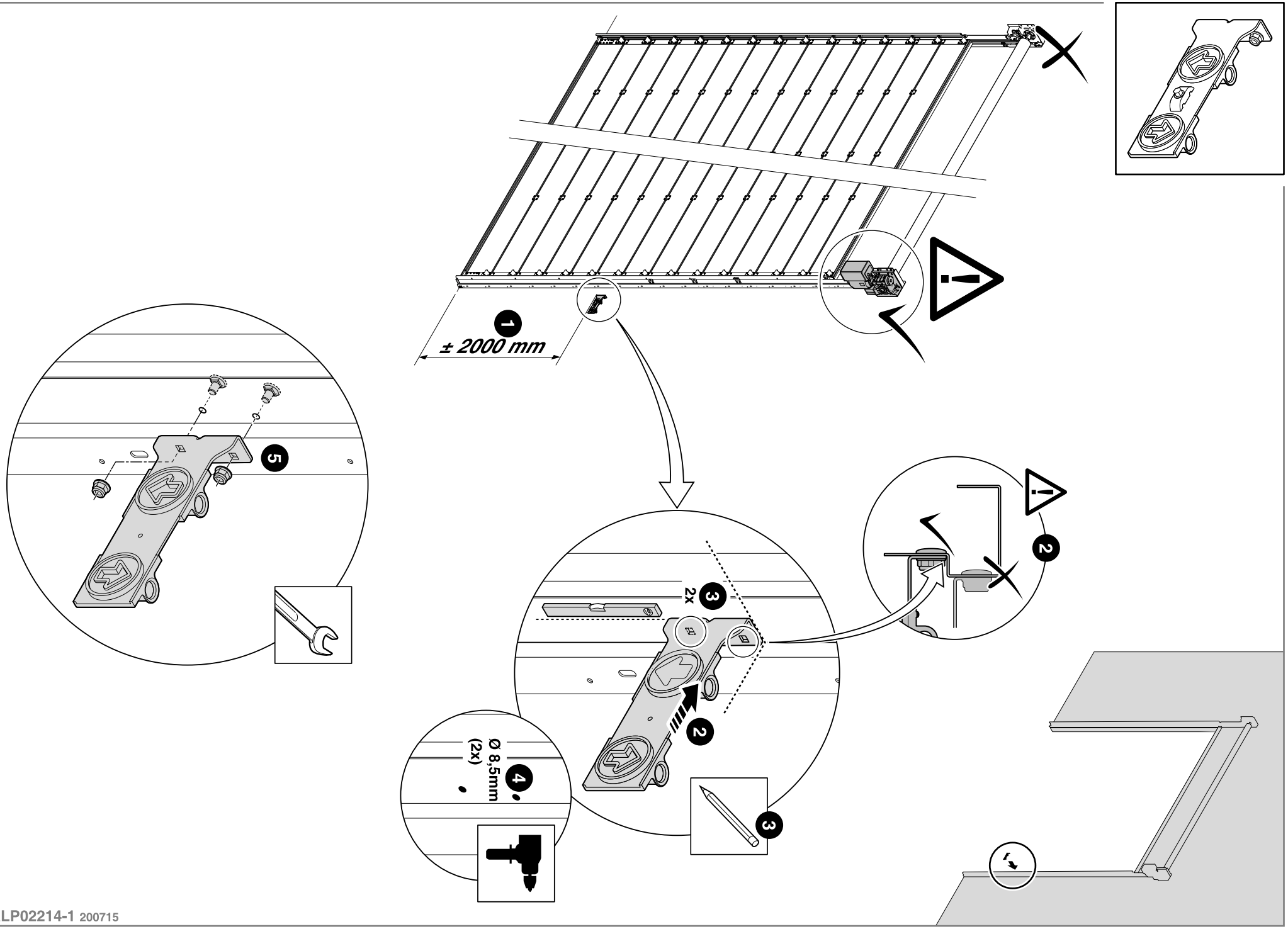
1
± 2000 mm
2
3
2x
2
3
4
Ø 8,5mm
(2x)
5

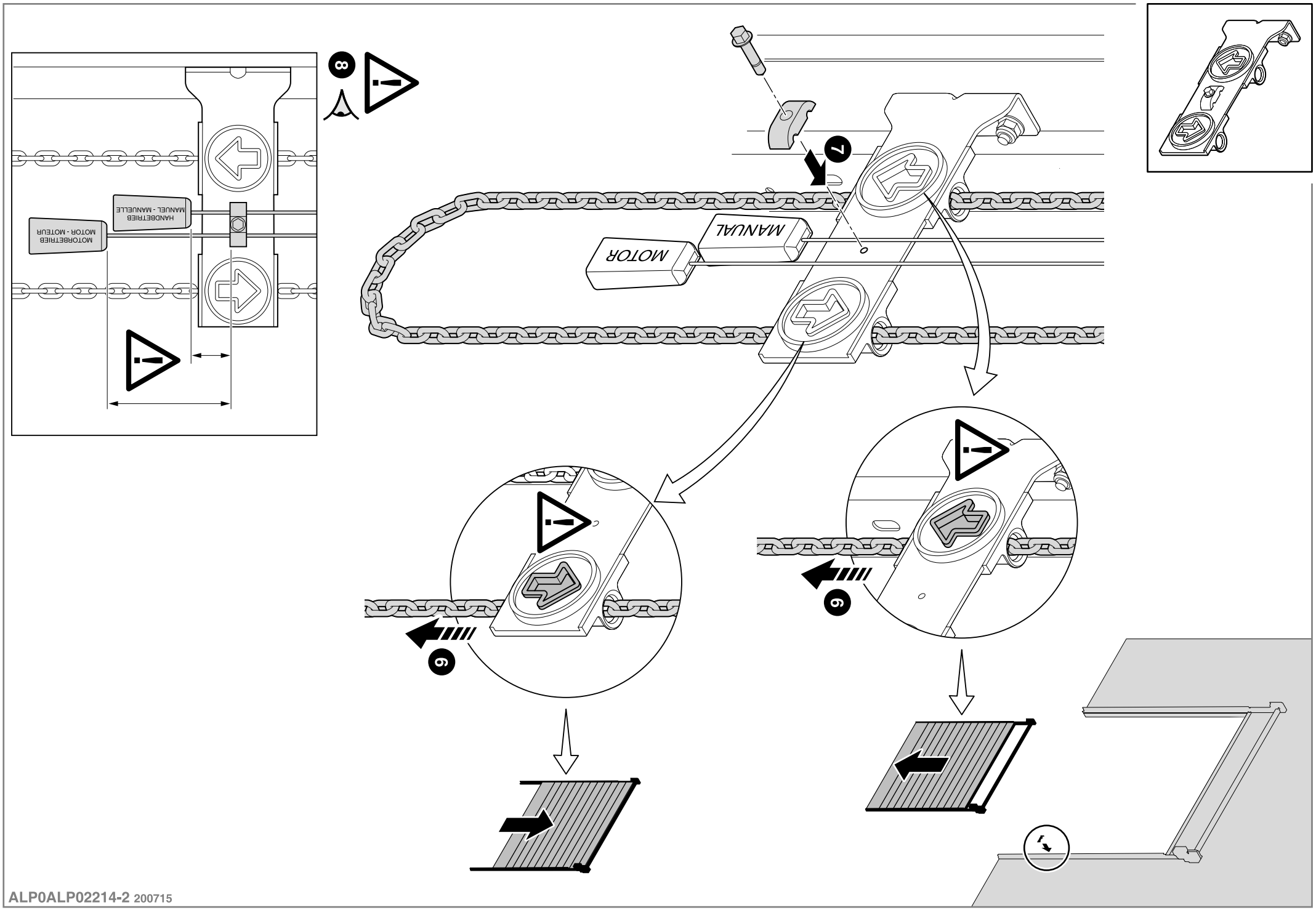
MOTOR
MANUAL
7
MOTORBETRIEB
MOTOR - MOTEUR
HANDBETRIEB
MANUEL - MANUELLE
8
9
9

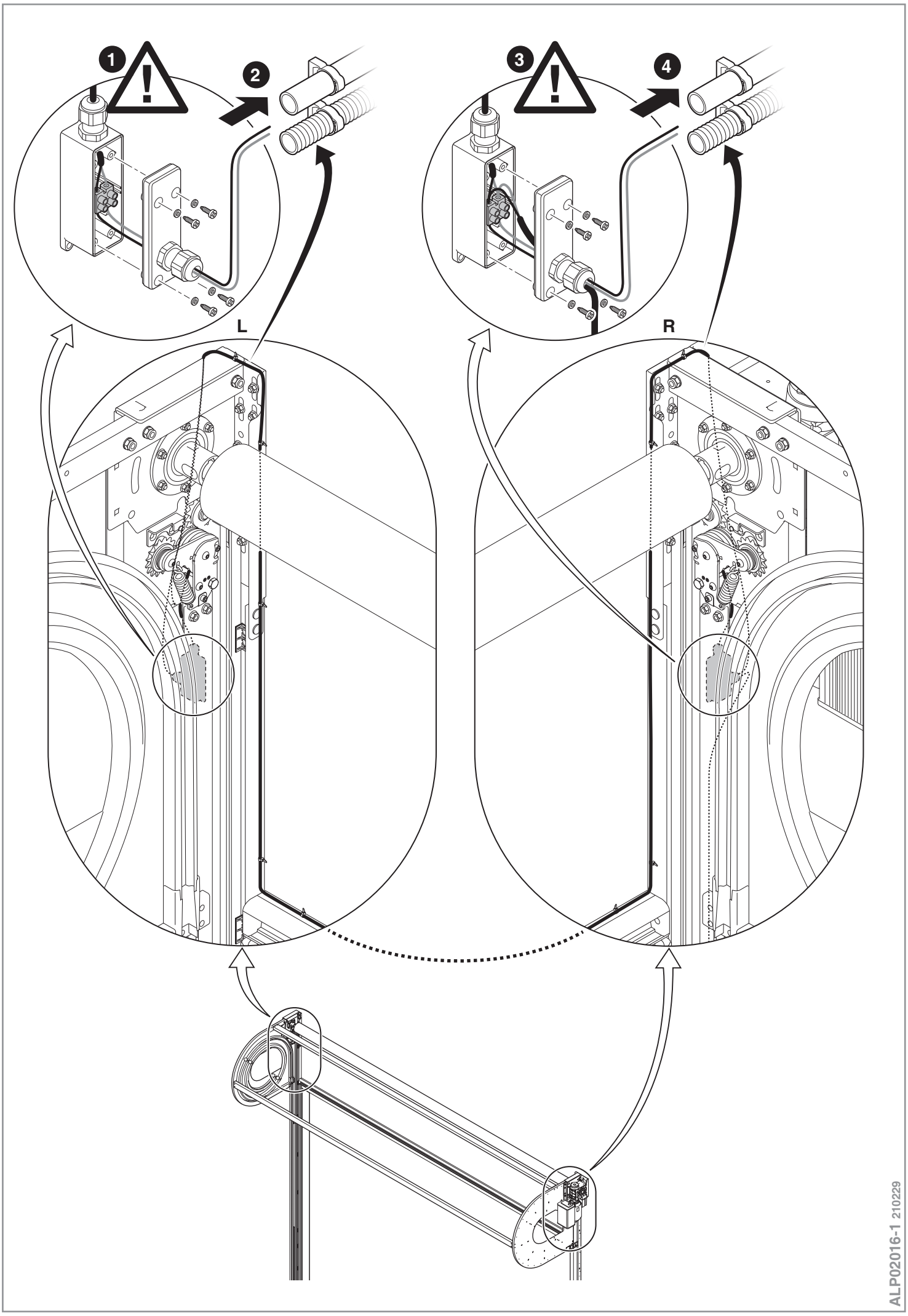
1
2
3
4
L
R
ALP02016-1 210229

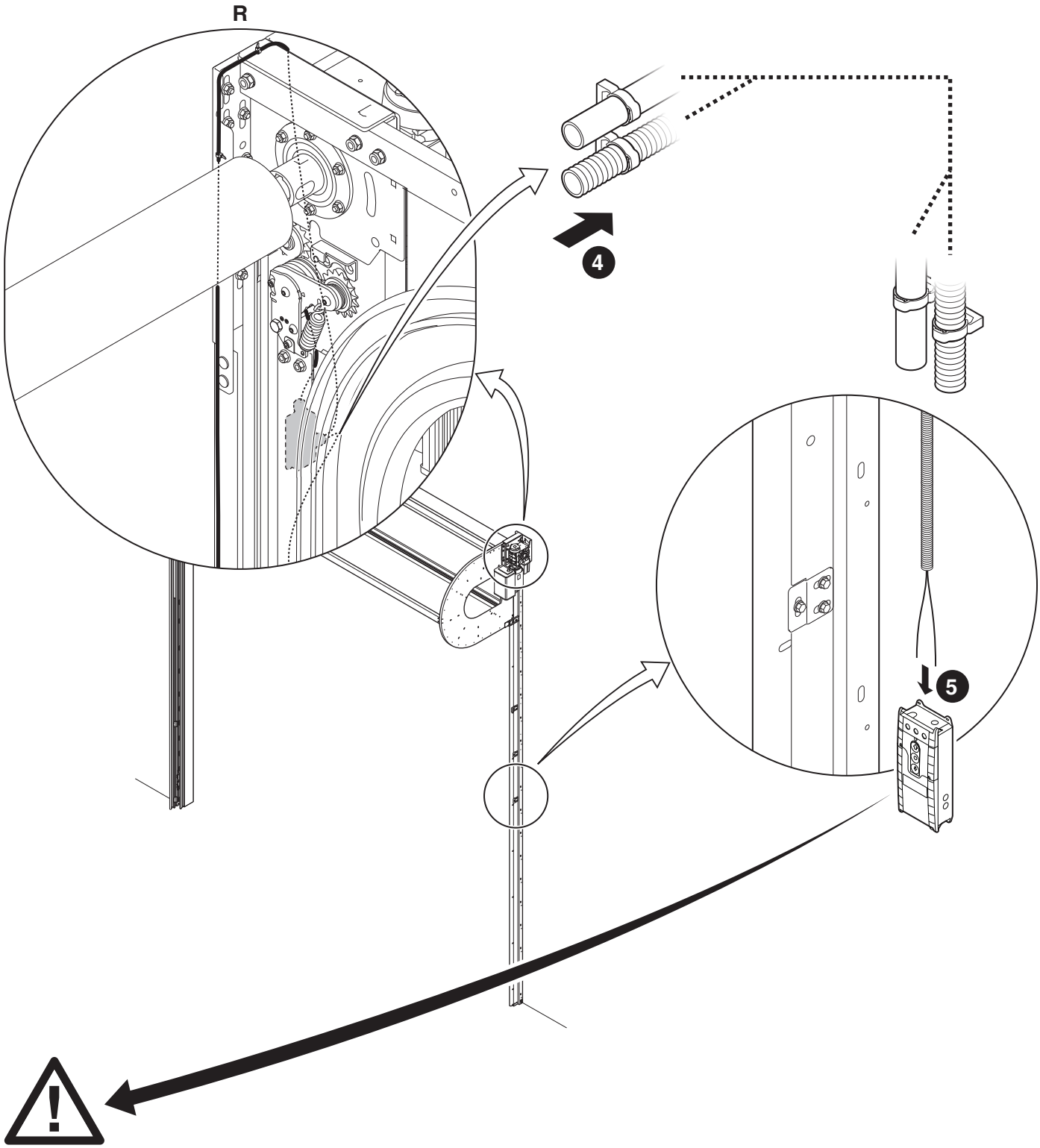

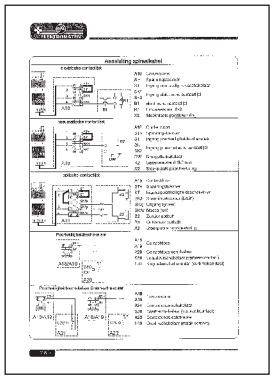

Farbe/Kleur/ Colour/Couleur	'Anschluss/ Aansluiting/ Connection/Raccordement	Funktion /Functie/ Function/ Fonction
Kabel 1 Kabel 1 Cable 1 Câble 1	3.1 X3-Gateway 3.1 X3-Poort 3.1 X3-Gateway 3.1 X3-Port	Anschluss Steuerung Aansluiting sturing Connection controller Raccordement commande
Kabel 2 Kabel 2 Cable 2 Câble 2	3.2 X3-Gateway 3.2 X3-Poort 3.2 X3-Gateway 3.2 X3-Port	Anschluss Steuerung Aansluiting sturing Connection controller Raccordement commande

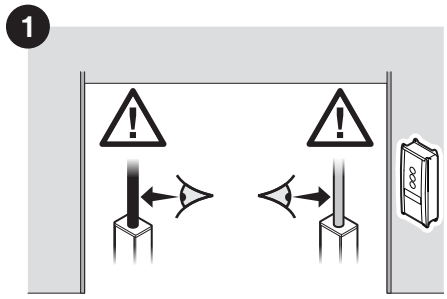

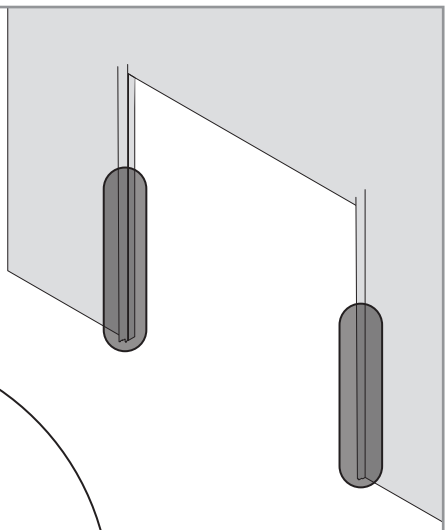

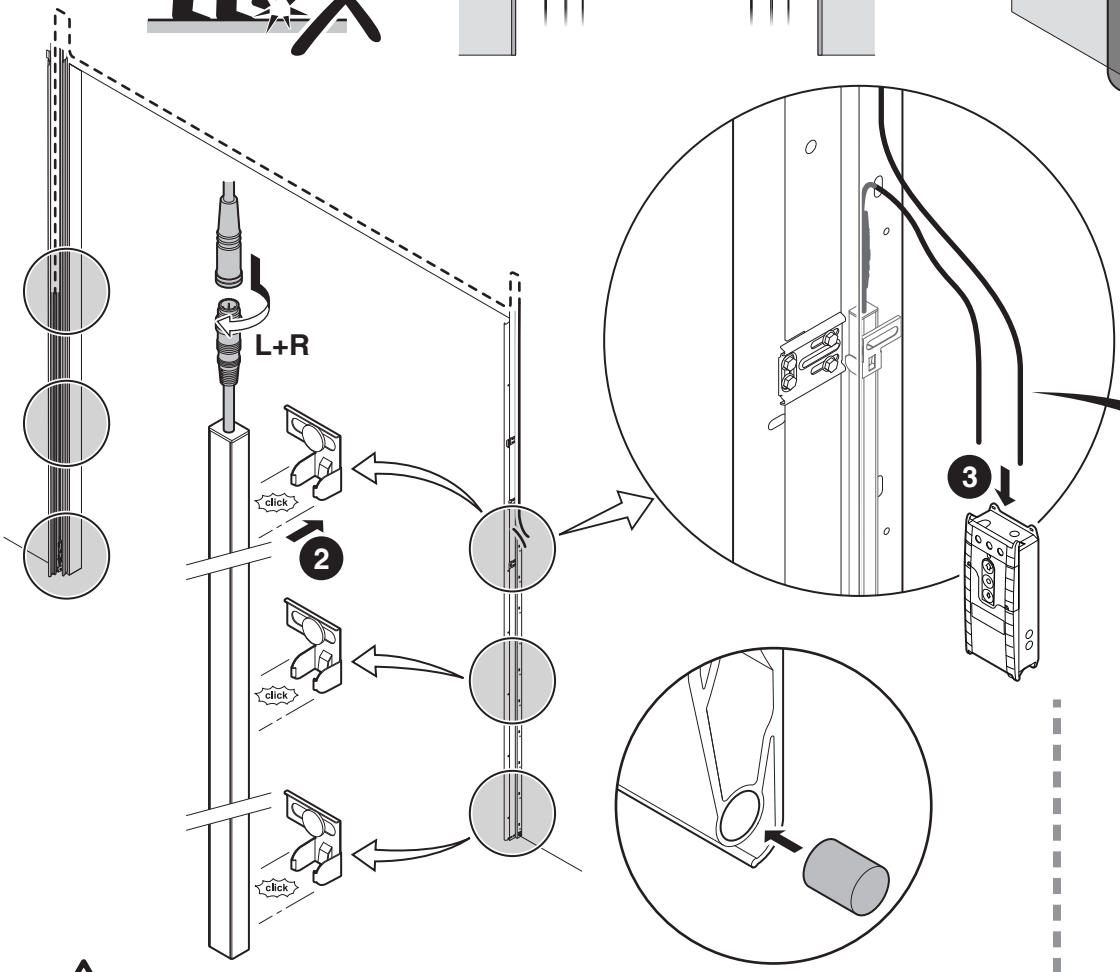

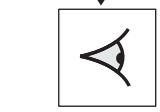

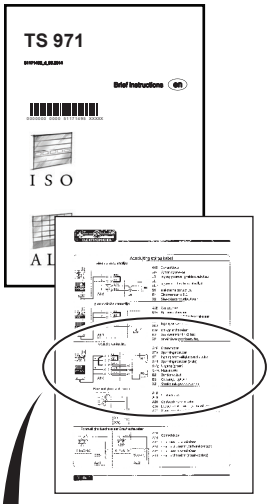

Sender SGT/ Zender SGT/ Transmitter SGT/ Émetteur SGT		
Farbe/Kleur/ Colour/Couleur	**'Anschluss/ Aansluiting/ Connection/Raccordement**	**Funktion /Functie/ Function/ Fonction**
Braun/Bruin/ Brown/Brun	24V / 2.1	Zuführung/Voeding/ Power supply/Alimentation
Blau/Blauw/ Blue/Bleu	GND / 2.5	⏚
Schwarz/Zwart/ Black/Noir	Kein Anschluss/Geen aansluiting/ No connection/Pas de raccordement	–
Weiß/Wit/ White/Blanc	Kein Anschluss/Geen aansluiting/ No connection/Pas de raccordement	–

Empfänger SGR/ Ontvanger SGR/ Receiver SGR/ Récepteur SGR		
Farbe/Kleur/ Colour/Couleur	**'Anschluss/ Aansluiting/ Connection/ Raccordement**	**Funktion /Functie/ Function/ Fonction**
Braun/Bruin/ Brown/Brun	24V / 2.1	Anschluss Steuerung Aansluiting sturing Connection controller Raccordement commande
Blau/Blauw/ Blue/Bleu	2.5	
Schwarz/Zwart/ Black/Noir	2.3	
Weiß/Wit/ White/Blanc	Kein Anschluss/ Geen aansluiting/ No connection/ Pas de raccordement	

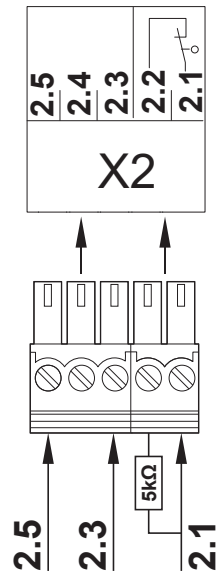

ALP02015a 211221

© Copyright Alpha deuren International b.v.
This manual was prepared and issued by Alpha deuren International B.V. Netherlands. It is supplied to approved agents of Alpha deuren International B.V.
All rights are reserved. The information in this document is the property of Alpha deuren International B.V., the Netherlands. Disclosure of this information or any part of it to third parties is prohibited, except with prior and express written permission of Alpha deuren International B.V., the Netherlands.

Alpha deuren International b.v., Pittelderstraat 10, 6942 GJ Didam, The Netherlands, www.alpha-deuren.nl